ENGINEERING
TOMORROW

Danfoss scroll compressors for refrigeration

High efficiency and reliability
even in low temperatures
Cooler than ever!

MLZ and LLZ series for MBP and LBP refrigeration are efficient by design.
Cut down operating costs and meet the most demanding food standards.
LLZ & MLZ: the new names in scroll technology!

-40°F to +50°F
extended compressor range.
Suits rack systems and all applications for refrigeration.

http://cc.danfoss.com

Danfoss **scroll compressors** for refrigeration applications

The MLZ and LLZ series are purpose-engineered for applications in refrigeration with respectively medium and low temperatures. They suit all operating conditions in different cooling systems.

energy savings
Optimize your system with the scroll compressors for refrigeration. The combination of an energy efficient motor and an optimized scroll wrap for refrigeration applications delivers high efficiency in fi ed-speed compressors. Optional vapor injection boosts the cooling capacity and efficiency by more than 20%.

Low sound
Improve the sound environment with the lowest sound level in the industry Scroll technology is quiet by design: the scroll provides smooth continuous compression, the absence of suction and discharge valves, and the unique disc check valve design ensure quiet, vibration-free operations.

Reliability
Improve your system reliability to reduce your maintenance and warranty costs Reliability is built into this compressor range, from the compliant scroll design and the engineered bearings to the simplified manufacturing process (30% fewer parts). The patented thermal fault protection also contributes to excellent reliability. A smart way to reduce your field service costs.

Compactness
Footprint up to 30% smaller than alternative reduces the logistics costs and frees up space in the system.

significant
annual cost savings with vapor injection.

Featured for immediate **benefit**

- Multi-refrigerant scrolls save on inventory
- Vapor injection available with optional economizer kit increases LLZ efficiency and cooling capacity
- Optional sound jacket attenuates sound levels
- Suitable for transport of refrigerated goods

Wide operating envelopes **comply with all applications** in the refrigeration

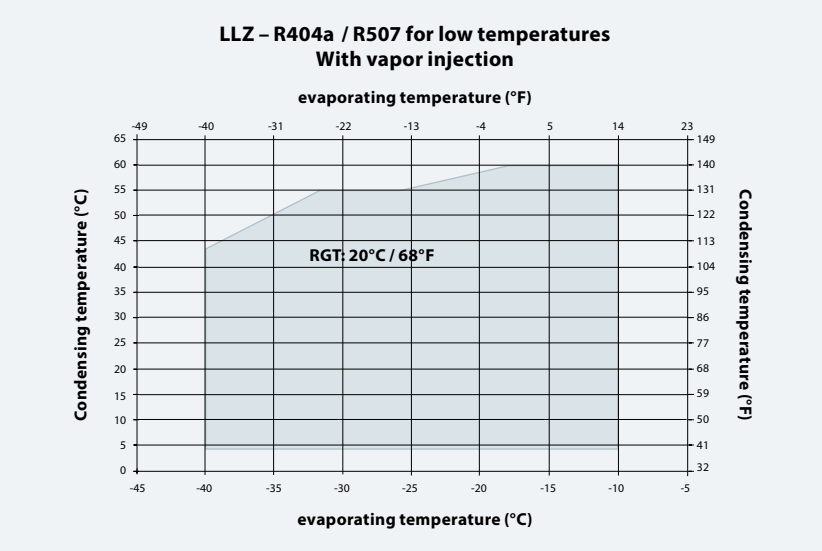

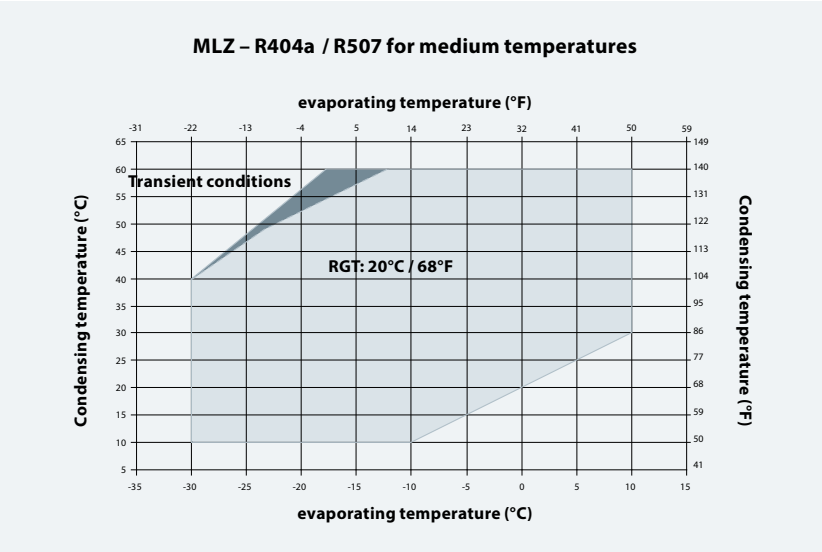

Boost cooling **capacity and efficiency** with **vapor injection** in low temperatures

Danfoss proposes the optional economizer kit to boost compressor efficiency and capacity with vapor injection. The system uses a liquid subcooler circuit. During the liquid subcooler process, some liquid refrigerant evaporates in the economizer and is injected into the scroll set at intermediate pressure. This provides additional cooling capacity thanks to subcooling in the economizer and increases efficiency of the system.

The effect of vapor injection increases together with the increase of the system pressure ratio.

Dimensions

Dimensions in inch	H	H1	H2	D	Weight (lbs)
LLZ 013-018	18.8	11.9	14.8	7.2	92.6
LLZ 024	21.0	13.5	16.3	7.2	101.4
LLZ 034	21.9	14.4	17.3	7.2	112.4
MLZ 015-026	15.5	9.1	14.2	6.5	68.3
MLZ 030-048	17.2	10.3	15.9	7.2	81.6
MLZ 058-076	20.8	13.8	19.6	9.1	99.2

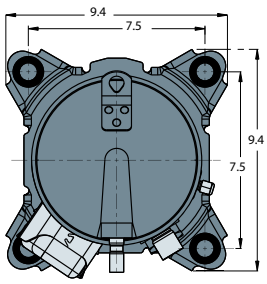

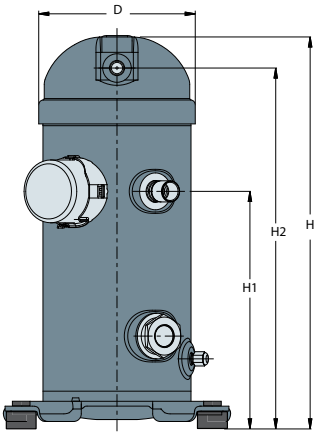

ENGINEERING
TOMORROW

COOLING CAPACITY in W / 100°F CONDENSING

ARI

MLZ – medium temperatures

R134a

60HZ • 460 V / 3-phases

MLZ Models	5°F	10°F	20°F	30°F	40°F	50°F	60°F	"Cooling capacity Btu/h"	"Power Input kW"	"EER Btu/h/W"	"Sound power dB(A)"
MLZ015	7 100	8 100	10 700	13 700	17 200	21 200	25 700	9 300	1,3	7,17	71
MLZ019	9 100	10 500	13 700	17 600	22 100	27 300	33 100	12 000	1,68	7,10	71
MLZ021	9 500	11 100	14 700	18 800	23 500	29 000	35 300	12 800	1,74	7,34	71
MLZ026	11 900	13 800	18 000	23 100	29 100	35 900	43 500	15 700	2,1	7,47	71
MLZ030	14 400	16 600	21 800	27 900	35 000	43 200	52 400	18 900	2,57	7,37	73
MLZ038	17 000	19 500	25 500	32 700	41 200	50 800	61 600	22 300	3,05	7,30	74
MLZ045	21 000	24 200	31 500	40 200	50 500	62 200	75 600	26 900	3,64	7,37	74
MLZ048	22 400	25 700	33 300	42 500	53 200	65 500	79 500	28 600	3,88	7,37	75
MLZ058	26 800	30 700	39 600	50 200	62 500	76 600	92 500	34 300	4,69	7,30	78
MLZ066	30 900	35 300	45 500	57 600	71 700	88 000	106 500	39 400	5,34	7,37	78
MLZ076	35 000	39 700	51 000	64 600	80 500	98 700	119 300	44 300	6,16	7,17	78

ARI MBP: Evaporating temperature: 20°F; Condensing temperature: 120°F; Subcooling 0°F; Superheat 20°F

R404a

60HZ • 460 V / 3-phases

MLZ Models	-10°F	-5°F	0°F	10°F	20°F	30°F	40°F	50°F	"Cooling capacity Btu/h"	"power input kW"	"eeR Btu/h/W"	"Sound power dB(A)"
MLZ015	8 100	9 300	10 700	13 700	17 200	21 400	26 300	31 900	13 700	2,29	6,01	71
MLZ019	11 300	12 800	14 500	18 300	22 800	28 000	34 200	41 300	18 400	2,81	6,55	71
MLZ021	12 000	13 600	15 400	19 500	24 300	29 900	36 400	43 800	19 700	2,98	6,62	71
MLZ026	15 000	16 900	19 100	24 200	30 200	37 200	45 400	54 600	24 400	3,75	6,52	71
MLZ030	17 500	19 900	22 500	28 400	35 500	43 800	53 300	64 200	28 700	4,25	6,76	73
MLZ038	21 000	23 900	27 000	34 100	42 500	52 300	63 700	77 000	34 500	5,13	6,72	74
MLZ045	25 500	29 000	32 700	41 300	51 500	63 500	77 500	93 500	41 800	6,16	6,79	74
MLZ048	27 900	31 600	35 700	45 100	56 400	69 600	84 700	101 900	45 700	6,71	6,79	75
MLZ058	31 700	36 400	41 600	53 500	67 700	84 200	103 200	124 600	52 500	8,01	6,55	78
MLZ066	37 800	42 800	48 400	61 200	76 500	94 500	115 400	139 300	62 000	9,14	6,79	78
MLZ076	43 700	49 500	55 800	70 200	87 500	108 100	132 400	160 900	70 000	10,43	6,72	78

ARI MBP: Evaporating temperature: 20°F; Condensing temperature: 120°F; Subcooling 0°F; Superheat 20°F

LLZ – low temperatures

R404a

60HZ • 460 V / 3-phases

LLZ Models	-10°F	-5°F	0°F	10°F	20°F	30°F	40°F	"Cooling capacity Btu/h"	"Power input kW"	"EER Btu/h/W"	"Sound power dB(A)"
LLZ013	-	-	12 000	13 700	15 500	19 500	29 700	13 200	2,29	4,51	71
LLZ015	-	-	14 800	16 800	19 000	24 000	37 400	16 100	2,81	4,61	71
LLZ018	-	-	17 600	19 900	22 600	28 600	44 500	19 200	2,98	4,78	71
LLZ024	-	-	21 900	24 900	28 200	35 700	55 600	24 000	3,75	4,91	71
LLZ034*	-	-	30 800	34 800	39 300	49 400	75 600	33 500	4,25	5,05	73
With economizer											
LLZ013-Eco.	13 700	15 700	17 800	19 900	22 100	26 800	37 800	19 700	5,13	5,53	74
LLZ015-Eco.	16 900	18 800	21 100	23 500	26 200	32 200	46 600	23 300	6,16	5,46	74
LLZ018-Eco.	20 200	22 500	25 200	28 100	31 300	38 500	55 700	27 900	6,71	5,73	75
LLZ024-Eco.	25 000	27 900	31 200	34 800	38 800	47 700	69 100	34 500	8,01	5,84	78
LLZ034-Eco.*	35 200	39 900	44 400	48 900	53 600	63 900	92 300	47 900	9,14	5,94	78

LLZ models without economizer: ARI LBP: Evaporating temperature: -25°F; Condensing temperature: 105°F; Subcooling 0°F; Return gas temperature 65°F
LLZ models with economizer: ARI LBP: Evaporating temperature: -25°F; Condensing temperature: 105°F; Subcooling 9°F; Return gas temperature 65°F
* preliminary data

Contact your Danfoss sales office to get more information or visit www.danfoss.com

Danfoss can accept no responsibility for possible errors in catalogues, brochures and other printed material. Danfoss reserves the right to alter its products without notice. This also applies to products already on order provided that such alterations can be made without subsequential changes being necessary in specifications already agreed. All trademarks in this material are property of the respective companies. Danfoss and the Danfoss logotype are trademarks of Danfoss A/S. All rights reserved.

© Copyright Danfoss Commercial Compressors